اعوذ بالله من الشيطن الرجيم
بسم الله الرحمن الرحيم
I seek refuge in GOD, from Satan the rejected
In the Name of GOD, Most Gracious, Most Merciful

Initial letters

The initial letters refer to the letters that are placed at the beginning of the 29 suras (chapters) of the Quran. **14** initial letters are shown in the below:

Alef – Lam – Meem – Saad – Ra – Kaaf – He – Ya – Ain – Ta – Seen - Hah – Qaaf – Noon

ا ل م ص ر ك ه ي ع ط س ح ق ن

1 It is interesting that there are only 114 (19*6) verses in Quran that have all ***14*** initial letters.114 is count of suras in the Quran too.

Note 1: It is interesting that first verse of this set is **2:19** and last verse is **73:20**.Now we sum verse numbers plus sura numbers of these two verses.

2+19+73+20=114=19*6 !!!

Note 2: It is interesting that the first verse of this set (2:19) has **19** words.

Note 3: We know that there are **112** unnumbered verses or unnumbered Basmallah in Quran.Now consider all verses that have all basmallah letters in these 114 verses. It is interesting that there are **112** verses. **112** is count of unnumbered verses too or unnumbered Basmallah.it means that only two verses havn't all Basmallah letters that are:2:220 ,24:56

114-2 numbered BSM= 112 Unnumbered BSM

List of 114 verses :

[2:19], [2:61], [2:140], [2:187], [2:213], [2:217],[2:220], [2:228], [2:237], [2:260], [2:275], [2:282], [2:285], [2:286], [3:93], [3:120], [3:154], [4:4],[4:34], [4:43], [4:46], [4:47], [4:69], [4:90], [4:92], [4:102], [4:129], [5:2], [5:3], [5:5], [5:6], [5:13], [5:33], [5:53], [5:75], [5:89], [5:95], [5:96], [5:110], [6:71], [6:119], [6:139], [6:151], [6:152], [7:131], [7:160], [7:168], [8:1], [9:29], [9:34], [9:42], [9:71], [9:121], [10:4], [10:24], [10:27], [10:93], [11:81], [11:88], [12:9], [12:36], [12:51], [12:80], [12:101], [13:4], [13:31], [13:41], [14:22], [16:76], [17:33], [18:18], [18:28], [18:45], [18:63], [20:71], [20:130], [20:132], [20:135], [22:11], [22:19], [22:54], [23:27], [24:31], [24:41], [24:56], [24:58], [24:61], [26:49], [27:59], [28:10], [28:19], [28:23], [28:38], [28:82], [30:48], [33:71], [35:11], [38:22], [38:24], [39:6], [40:64], [40:78], [42:52], [46:30], [47:15], [47:32], [48:29], [49:7], [57:25], [58:4], [61:14], [65:1], [72:28], [73:20]

Example 1:

[٥٧:٢٥] لقد ارسلنا رسلنا بالبينت وانزلنا معهم الكتب والميزان ليقوم الناس بالقسط وانزلنا الحديد فيه باس شديد ومنفع للناس وليعلم الله من ينصره ورسله بالغيب ان الله قوي عزيز

Example 2:

[٢:١٩] أو كصيب من السماء فيه ظلمت ورعد وبرق يجعلون أصبعهم في ءاذانهم من الصوعق حذر الموت والله محيط بالكفرين

② 29 initialled suras

Note 1: Some of initial letters is used as independent verse

like : **كهيعص** [١٩:١]

And some other is used as nonindependent verse

like : تلك ءايت الكتب الحكيم **الر** [١٠:١]

It is interesting that there is 19 Suras thet their initial letters are independent.

Note 2: Now please come and write the a string according to the count of initial letters,

Sura number

Count of initial letters in first verse of sura

2 ,3 ,3,3 ,7,4 ,10,3 ,11,3 ,12,3 ,13,4
14,3 ,15,3 ,19,5 ,20,2 ,26,3 ,27,2 ,28,3
29,3 ,30,3 ,31,3 ,32,3 ,36,2 ,38,1 ,40,2
41,2 ,42,2,43,2 ,44,2 ,45,2 ,46,2 ,50,1 ,68,2

It is very interesting that the above number is multiple of 19.

2333741031131231341431531952022632722832933033133233623814024124224324424524625016 82=19*…

Note 3: The above relation proved that Nun in sura 68 must be Two noon (نون) not one (ن).

No.	Sura number	Initial letters Arabic		Count of letters	Independent verse ?
1	2	A.L.M	الم	**3**	✓
2	3	A.L.M	الم	**3**	✓
3	7	A.L.M.**S**.	المص	**4**	✓
4	10	A.L.R.	الر	**3**	
5	11	A.L.R.	الر	**3**	
6	12	A.L.R	الر	**3**	
7	13	A.L.M.R.	المر	**4**	
8	14	A.L.R.	الر	**3**	
9	15	A.L.R.	الر	**3**	
10	19	K.H.Y. **A.S.**	كهيعص	**5**	✓
11	20	**T**.H.	طه	**2**	✓
12	26	**T**.S.M.	طسم	**3**	✓
13	27	**T**.S.	طس	**2**	
14	28	**T**.S.M.	طسم	**3**	✓
15	29	A.L.M.	الم	**3**	✓
16	30	A.L.M.	الم	**3**	✓
17	31	A.L.M.	الم	**3**	✓
18	32	A.L.M.	الم	**3**	✓
19	36	Y.S.	يس	**2**	✓
20	38	**S**.	ص	**1**	
21	40	H.M.	حم	**2**	✓
22	41	H.M.	حم	**2**	✓
23	42	H.M.`**A**.S.Q.	حم – عسق	**5**	✓
24	43	H.M.	حم	**2**	✓
25	44	H.M.	حم	**2**	✓
26	45	H.M.	حم	**2**	✓
27	46	H.M.	حم	**2**	✓
28	50	Q.	ق	**1**	
29	68	NuN	نون	**2**	
				79	**19**

③ Count of Gaps between initialled suras

Note 1: There is 19 Gap from sura 2 to sura 68 (from first initialed sura to last initialed sura) according to continous suras.

Note 2: First Form of initial is Alef-Lam-Mim and Last form is Nun. Total gv of this two form is **171(19*9).**

Sura number	Initial letters Arabic		Gap Between
2	A.L.M	الم	**1**
3	A.L.M	الم	
	...		**2**
7	A.L.M.**S**.	المص	**3**
	...		**4**
10	A.L.R.	الر	**5**
11	A.L.R.	الر	
12	A.L.R	الر	
13	A.L.M.R.	المر	
14	A.L.R.	الر	
15	A.L.R.	الر	
	...		**6**
19	K.H.Y. **A**.**S**.	كهيعص	**7**
20	**T**.H.	طه	
	...		**8**
26	**T**.S.M.	طسم	**9**
27	**T**.S.	طس	
28	**T**.S.M.	طسم	
29	A.L.M.	الم	
30	A.L.M.	الم	
31	A.L.M.	الم	
32	A.L.M.	الم	
	...		**10**
36	Y.S.	يس	**11**
	...		**12**
38	**S**.	ص	**13**
	...		**14**
40	H.M.	حم	**15**
41	H.M.	حم	
42	H.M.`**A**.S.Q	حم – عسق	
43	H.M.	حم	
44	H.M.	حم	
45	H.M.	حم	
46	H.M.	حم	
	...		**16**
50	Q.	ق	**17**
	...		**18**
68	NuN	نون	**19**

④ Tree diagram of initial letters

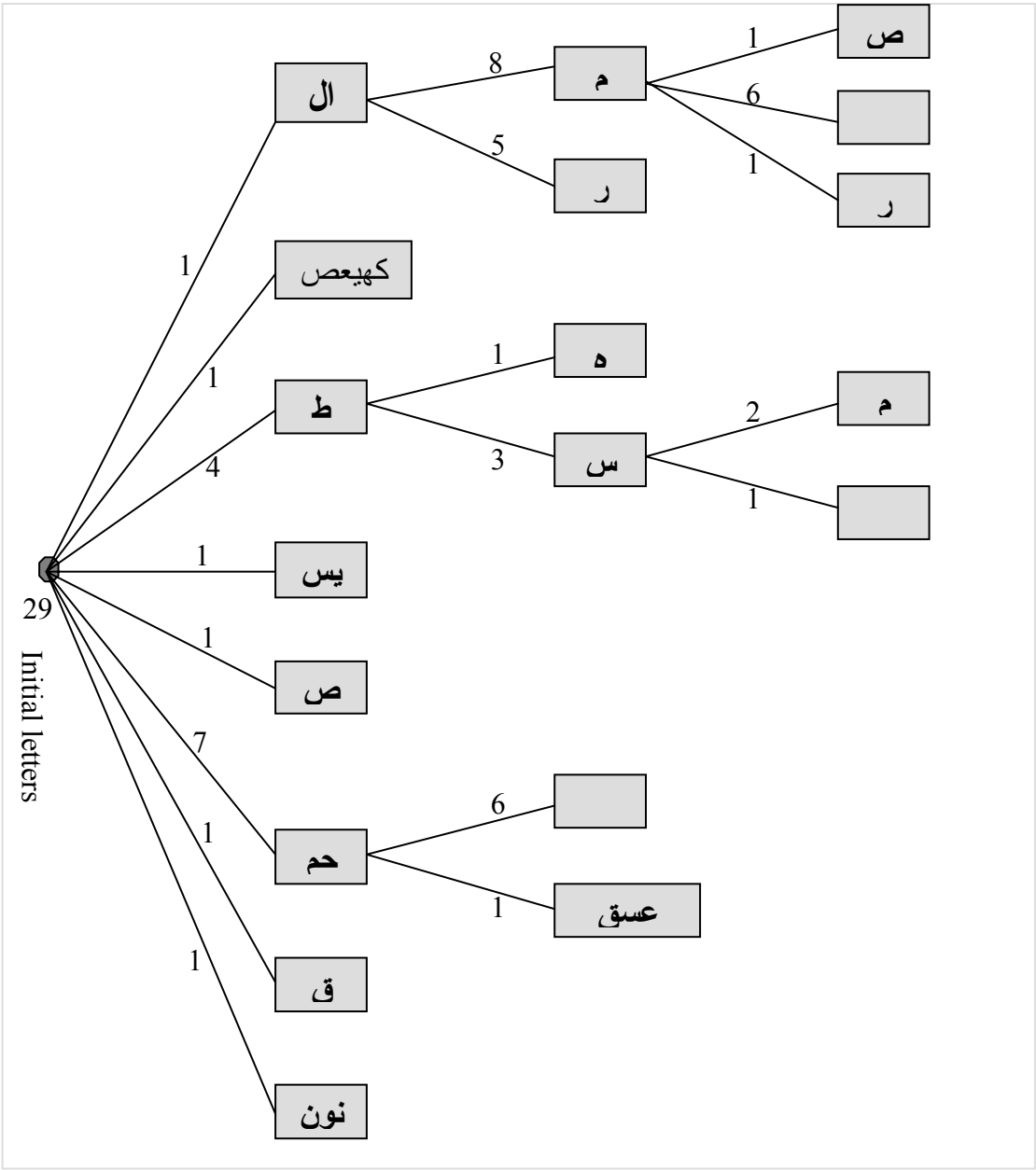

Note 1: **There is 19 node in the tree.**

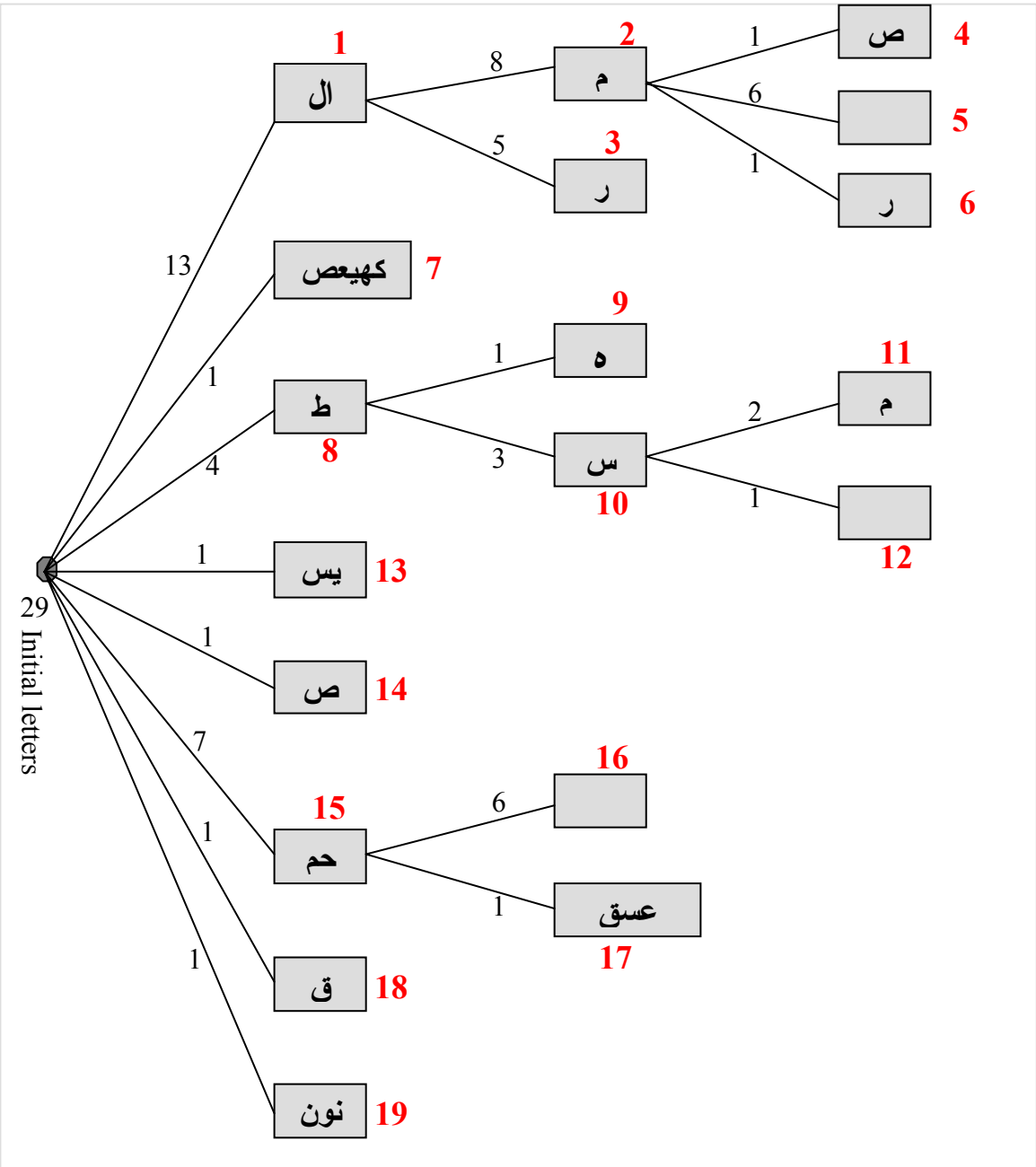

Note 2: **There is 19 line in the tree too.**

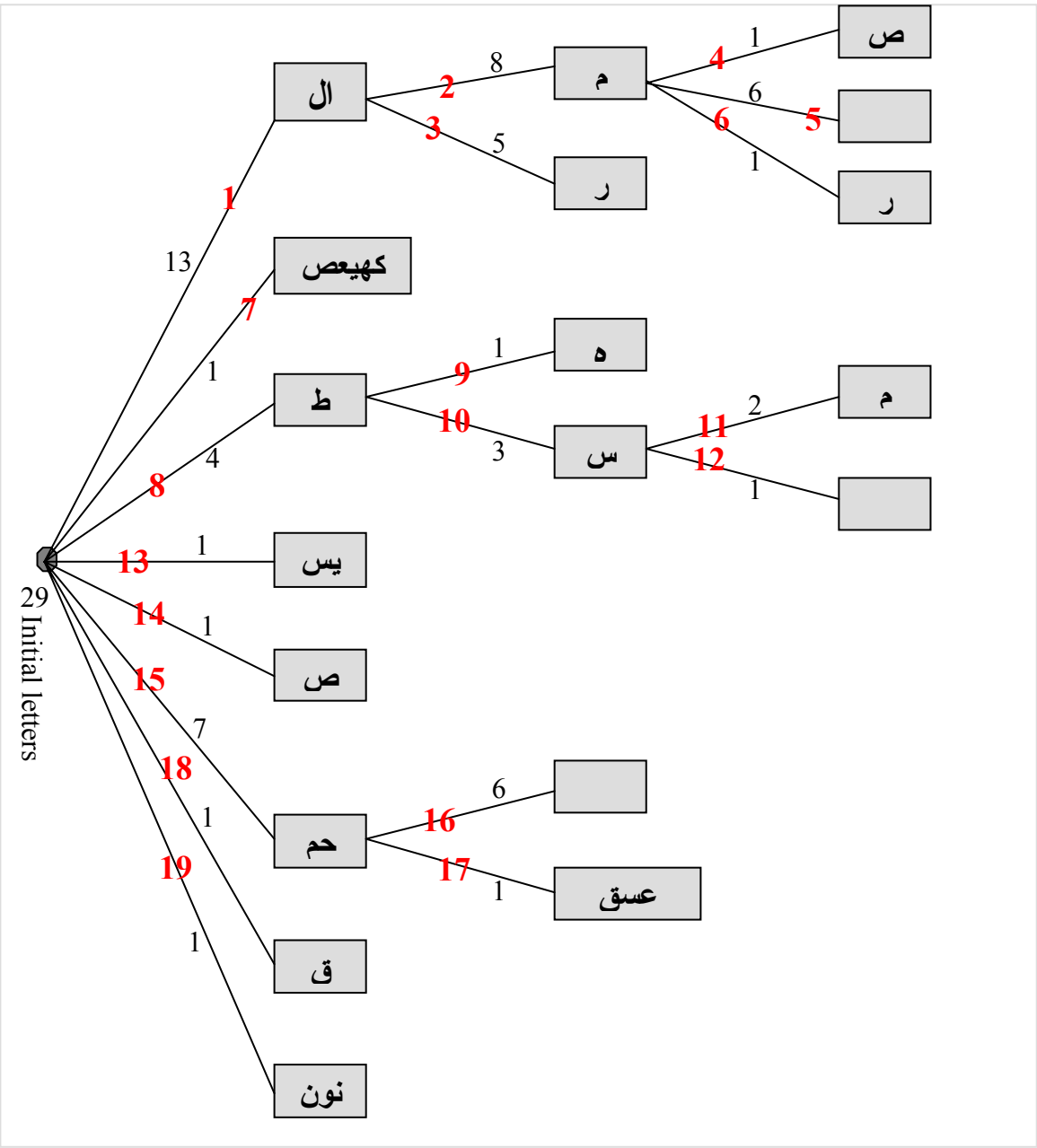

Note 3: **Last leaves of the tree has 19 letter. (red boxes)**

Note 4: **There is 14 form in tree without repetition**

ال – م – ص – ر – كهيعص – ط – ه – س – يس – حم – عسق – ق – نون

And Empty box

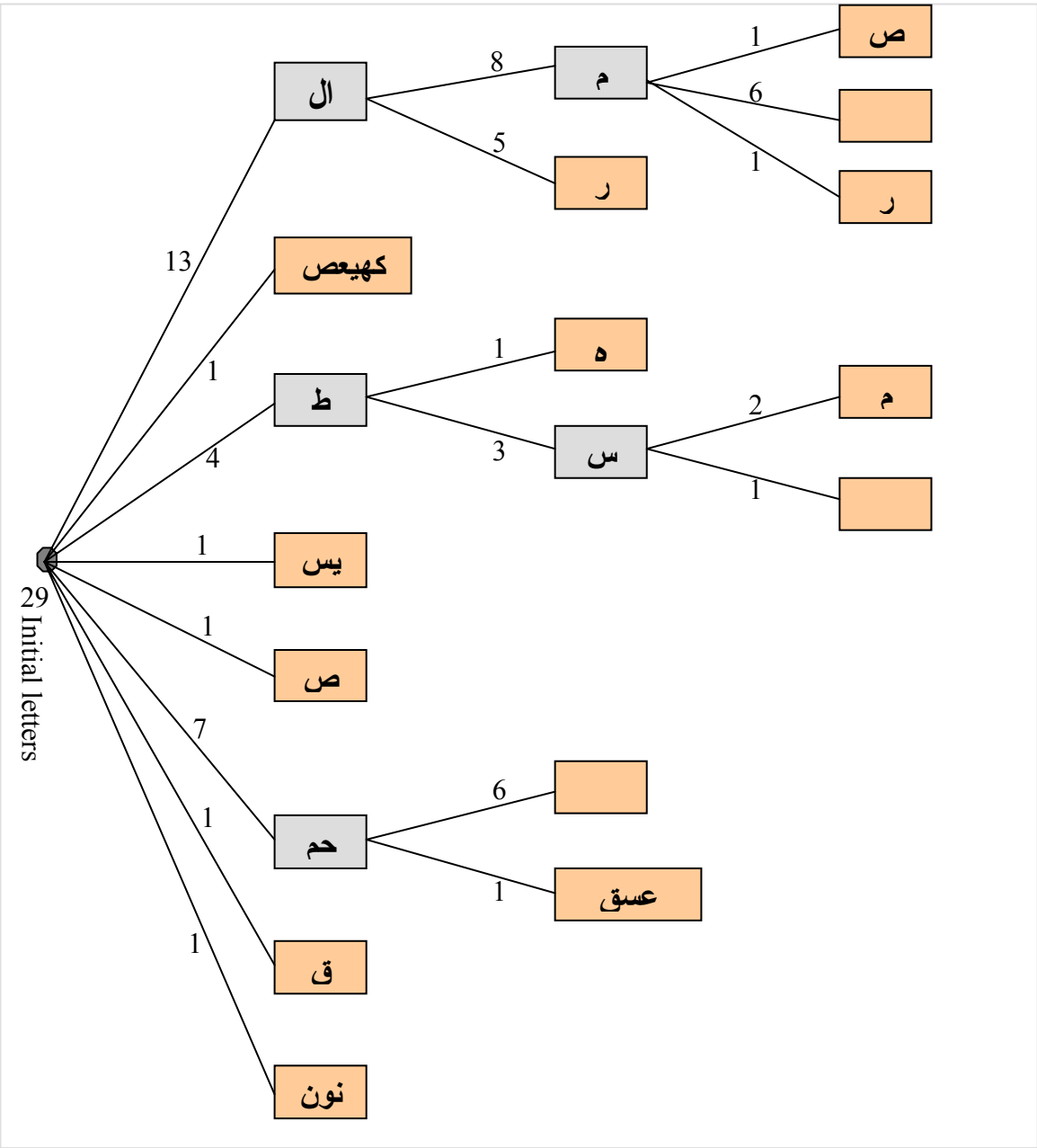

Note 5: **There is 19 letters (with empty boxes) in the lines that is repeated one times. (red lines)**

Note 6: **Count of leaf lines is 14. 14 is count of initial letters too.**

Note 7: **All nodes have 29 character (with empty boxes) . 29 is count of initialled suras too.**

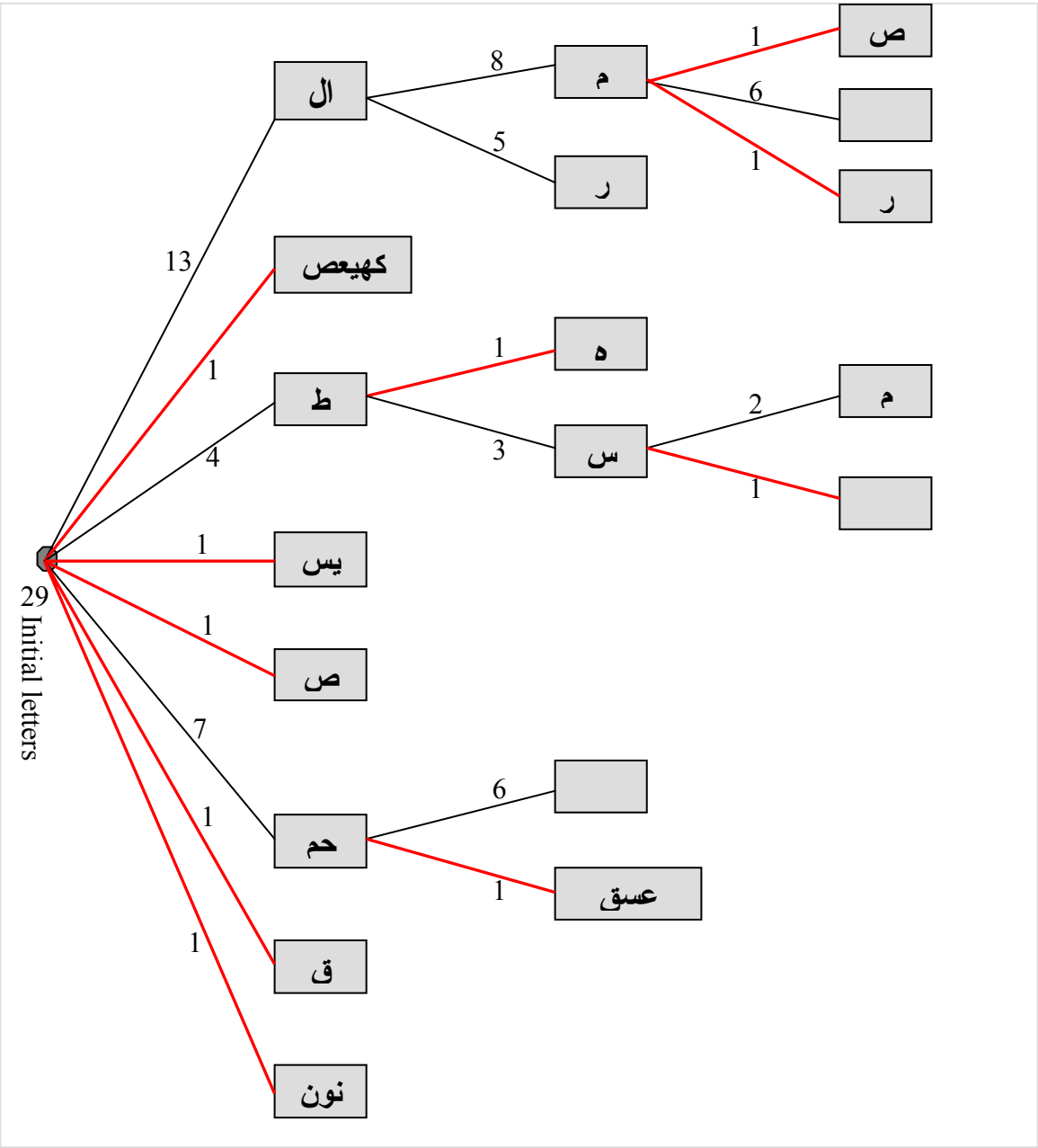

⑤ Loop Diagram of initial letters

If we draw loop diagram of initial letters,Then we have the below shape. For example we can draw كهيعص like the green line.

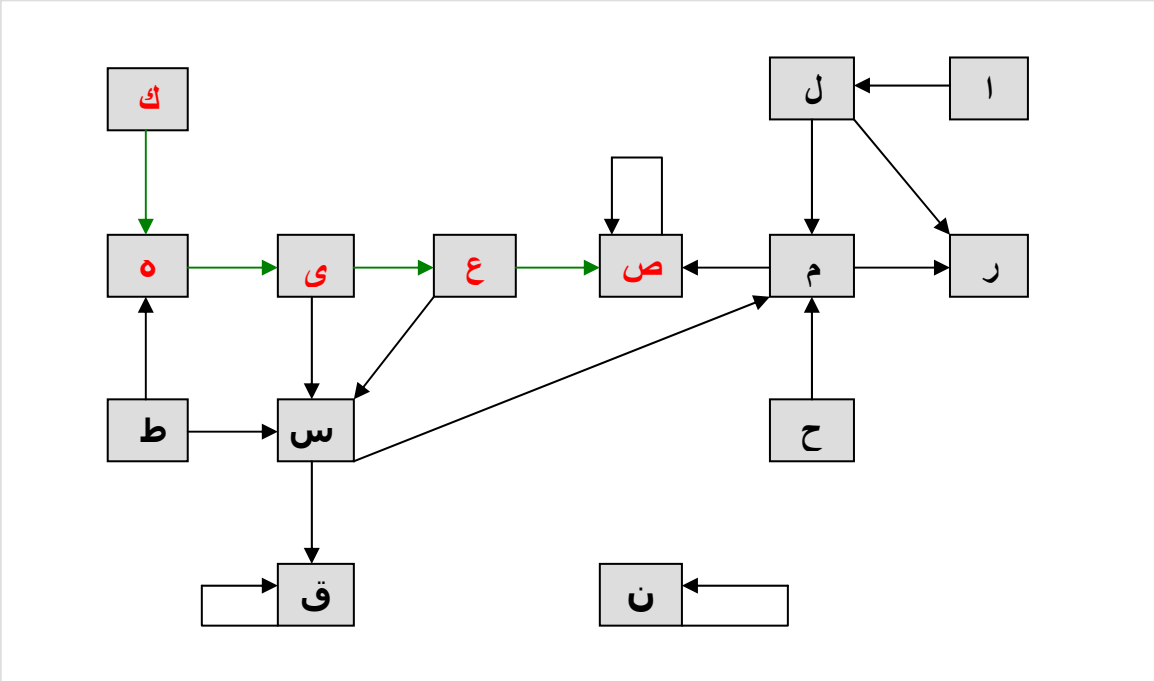

Note1 : **There is 19 line in the loop.**

Note2 : **Nun is like a gulf (Alone loop) in loop diagram**
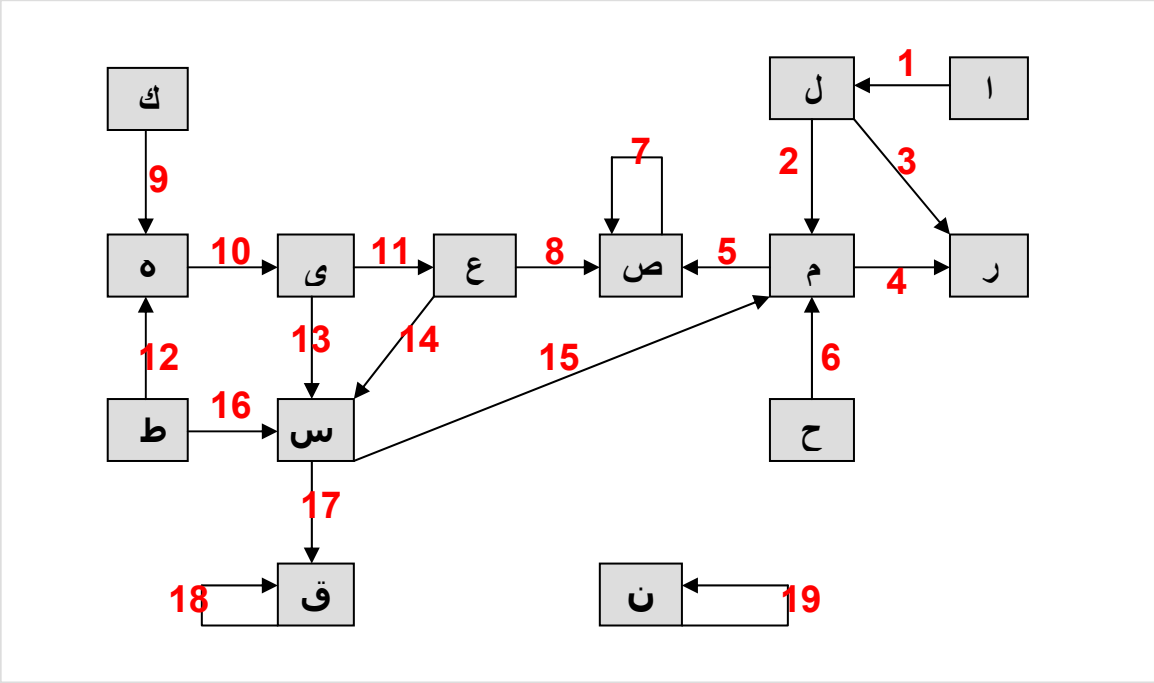
Note3 : **There is only three letters with one line that are Alef ,Kaf,Hah. The GV of these three letters is 29 . 29 is count of initial letters too.**